GAMSAN

Kasali, Siperliksiz veya Siperlikli KF Tipi Kondanser Aspiratörlerin Teknik Degerler Tablosu

Technical Characteristics of KF Condenser Aspirators with Case, with Guard Grilles or without

Sogutma islemleri için devamli isletme kondansatörlü distan rotorlu motor, nem korumali ve plastik kapsül muhafazali bobin.

Special version for refrigeration external-rotor motor with continious capacitor, humidity protected with plastic encapsulated bobin.

BAGLANTI SEMASI / ELECT. CONNECT.

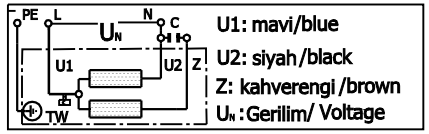

V (Vantilatör) (Aspiratör) A

Hava akis yönü
Air flow direction

KASA TIPI RESIM A
CASE TYPE DRAWING A

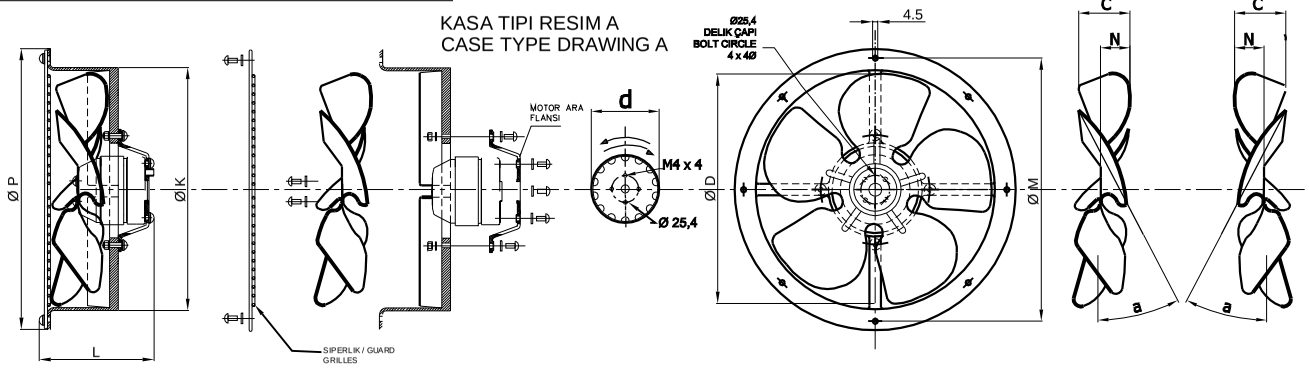

KASA TIPI RESIM B
CASE TYPE DRAWING B

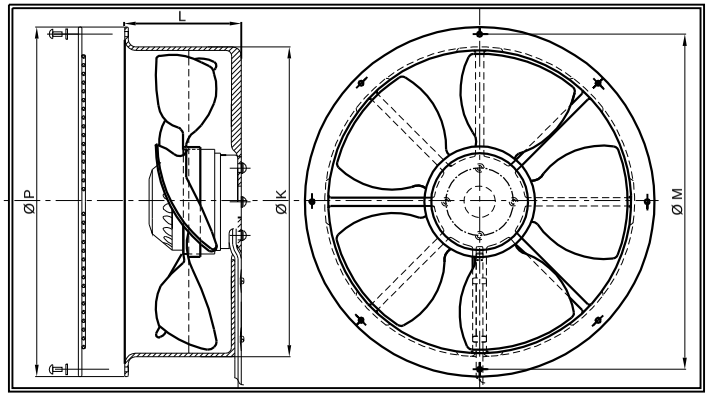

	Motor Motor						Motor - Fan Ölçüleri Motor - Fan Dimensions					Aksiyel kanat Axial impreller			Kanat açisi / Pitch									Kasa Case			
	Tip Type	Gerilim Voltage	Frekans Frequency	Nominal giris Rated Input	Nominal akim Rated current	Nominal devir Rated speed	Kondensatör Capacitor	K	M	P	L	d	Hava akis yönü Airflow dir.	Siparis No. Order No.	ø D	* a= 22° ± 1° 30'			** a= 28° ± 1° 30'			*** a=34° ± 1° 30'			Standart Siparis No. Standart Order No.	Tip Type	RESIM DRAWING	Agirlik Approx. weight
		V	Hz	W1/W2	A	D/dak RPM	µF/V	mm	mm	mm	mm	mm			mm	C ±2 mm	N ±2 mm	m³/h*	C ±2 mm	N ±2 mm	m³/h*	C ±2 mm	N ±2 mm	m³/h*				kg
**	KF 59- 01- 20- 01- AK	230	50	17/6	0.08	1600	0.65	164	190	200	78	59	V A	V A 154..	154	27,0	13,5	75	33	16	125	39,5	19,5	175	.....	1	A	
*	KF 59- 01- 20- 02- BK			16/5	0.07	1700	0.65	182	208	233	81	59	V A	V A 172..	172	30,5	14,5	150	36	17	220	42	21	285	.....	2	A	
	KF 59- 02- 20- 01- CK	230	50	29/8	0.15	1645	1,5	210	236	246	81.5	59	V A	V A 190..	190	31,5	15,0	240	36,5	17,5	380				.....	3	A	
**	KF 59- 02- 20- 01- DK							210	236	246	82	59	V A	V A 200..	200	32,0	15,5	240	37,0	18	380				.....	3	A	
*	KF 59- 02- 20- 02- EK			29/8	0.14	1525	1,5	240	266	276	-	59	V A	V A 230..	230	36,5	19,5	500							.....	4	A	
*	KF 59- 02- 20- 03- EK	230	50	37/10	0.18	1580	1.75	240	266	276	90	59	V A	V A 230..	230	36,5	19,5	500	43,0	21,5	605	55,0	26,0	770	.....	4	A	
*	KF 59- 02- 20- 04- FK			37/10	0.18	1300	1.75	264	290	300	-	59	V A	V A 254..	254	37	20	580							.....	5	A	
**	KF 90- 01- 13- 01- FK	230	50	56/17	0.25	1430	1,75	264	290	300	58	90	V A	V A 254..	254	37	20	640	45,0	23	925				.....	5	B	
**	KF 90- 01- 18- 01- FK	230	50	65/19	0.30	1480	2,2	264	290	300	58	90	V A	V A 254..	254	37	20	700	45,0	23	1000	52,0	26,0	1285	.....	5	B	
*	KF 90- 01- 18- 02- GK			65/19	0.30	1240	2,2	310	344	356	-	90	V A	V A 300..	300	42,5	25	1200							.....	6	B	
**	KF 90- 01- 25- 01- GK	230	50	113/26	0.59	1600	3.15	310	344	356	65	90	V A	V A 300..	300	42,5	25	1230	51	27	1750				.....	6	B	
**	KF 90- 01- 30- 01- GK	230	50	135/35	0.65	1650	4	310	344	356	65	90	V A	V A 300..	300	42,5	25	1270	51	27	1780	63,0	33,0	2160	.....	6	B	

BU TABLODA GÖSTERILEN TEKNIK VERILERIN, ÖNCEDEN BELIRTILMEKSIZIN TAMAMIYLA YA DA KISMEN DEGISTIRILME VEYA SILINME HAKKI SAKLIDIR.

WE RESERVE THE RIGHT TO ALTER OR DELETE, FULLY OR PARTLY THE TECHNICAL SPECIFICATIONS GIVEN IN THIS TABLE WITHOUT PRIOR NOTICE.

* 22° LIK PERVANE, ** 28° LIK PERVANE ,*** 34° LIK PERVANE ILE TEST YAPILMISTIR.